MOTOBECANE
Mobylette
MOTOBECANE
MOTOBECANE
Mobylette
MOTOBECANE

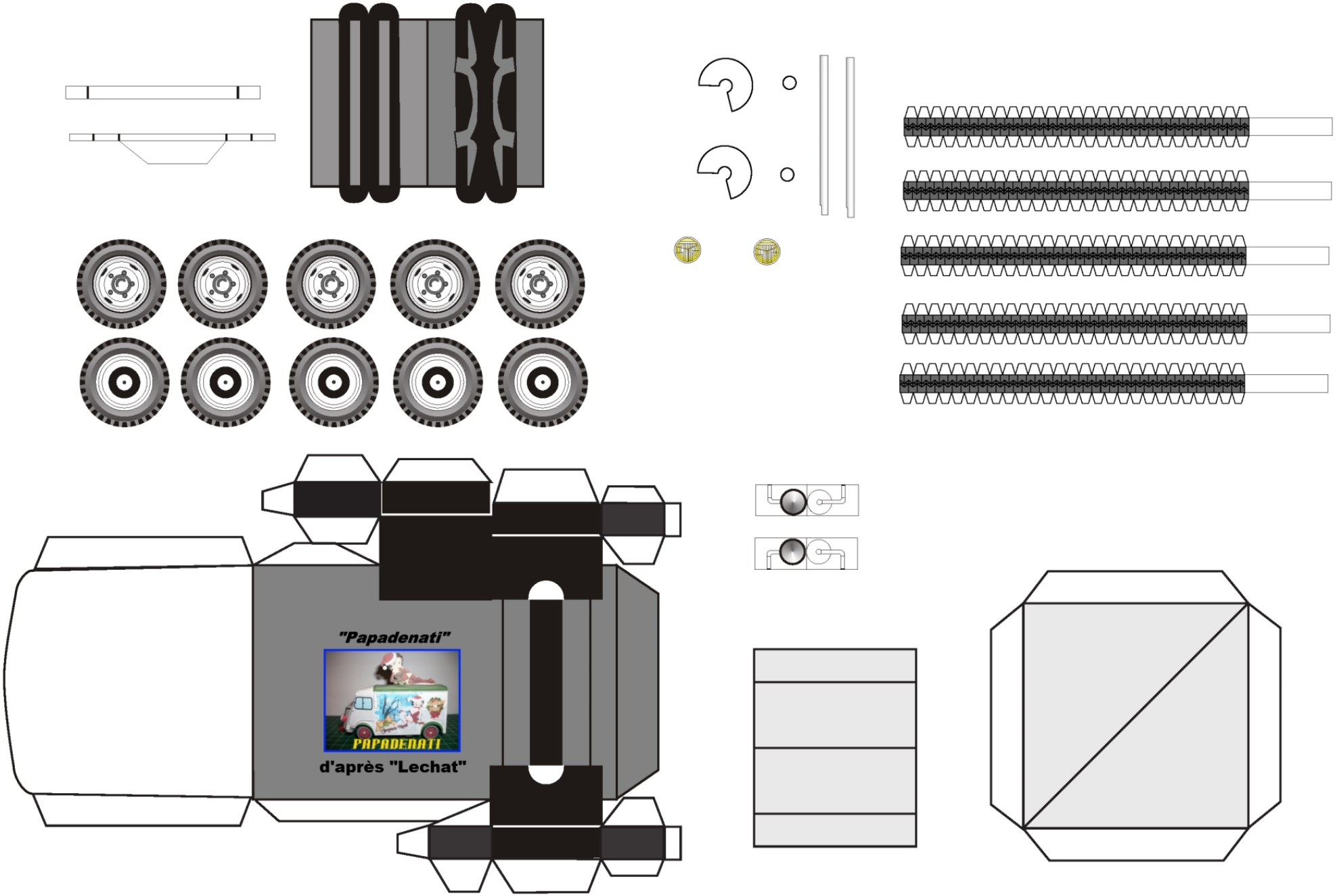
"Papadenati"
PAPADENATI
d'après "Lechat"